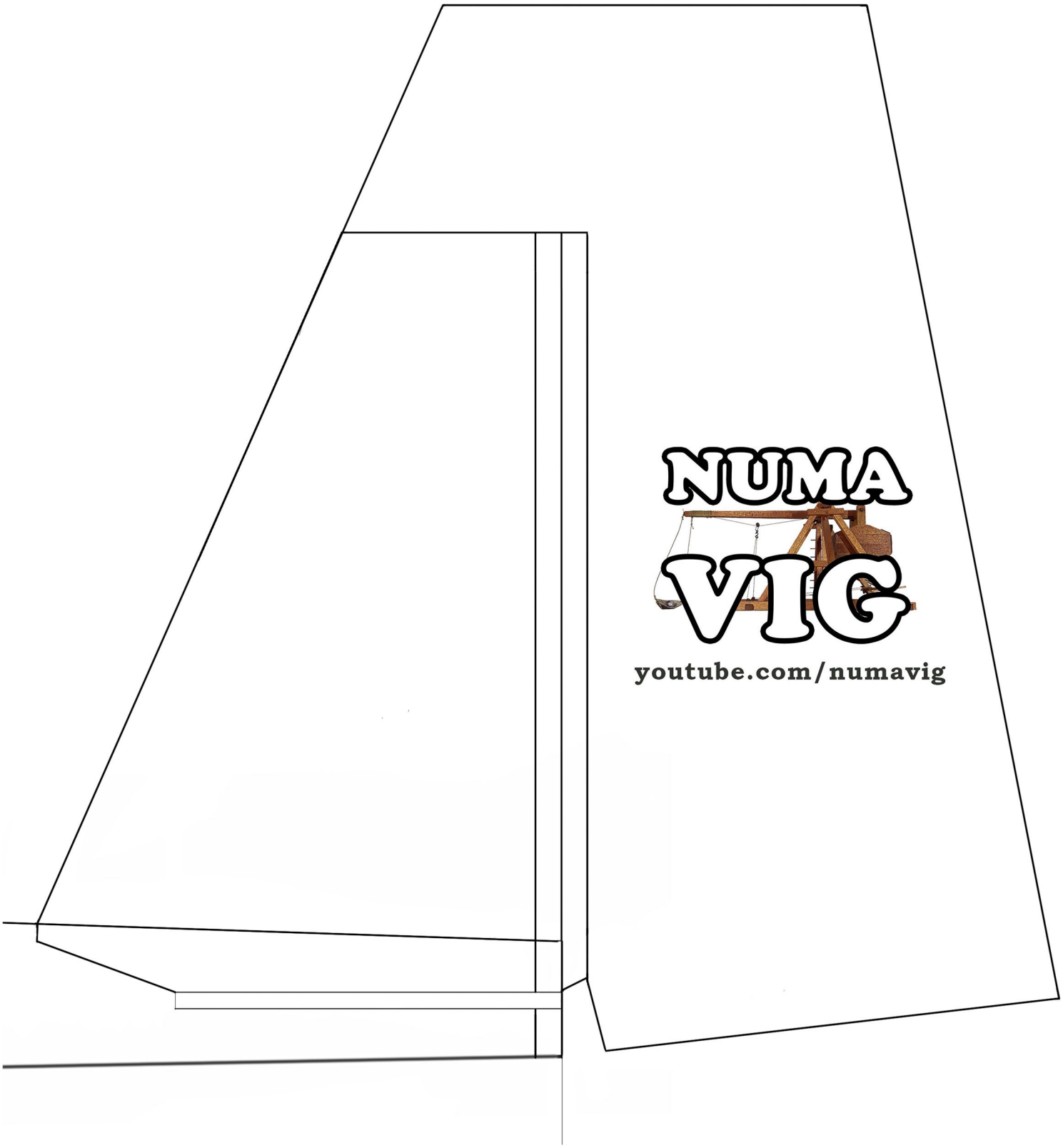
NUMA
VIG
youtube.com/numavig

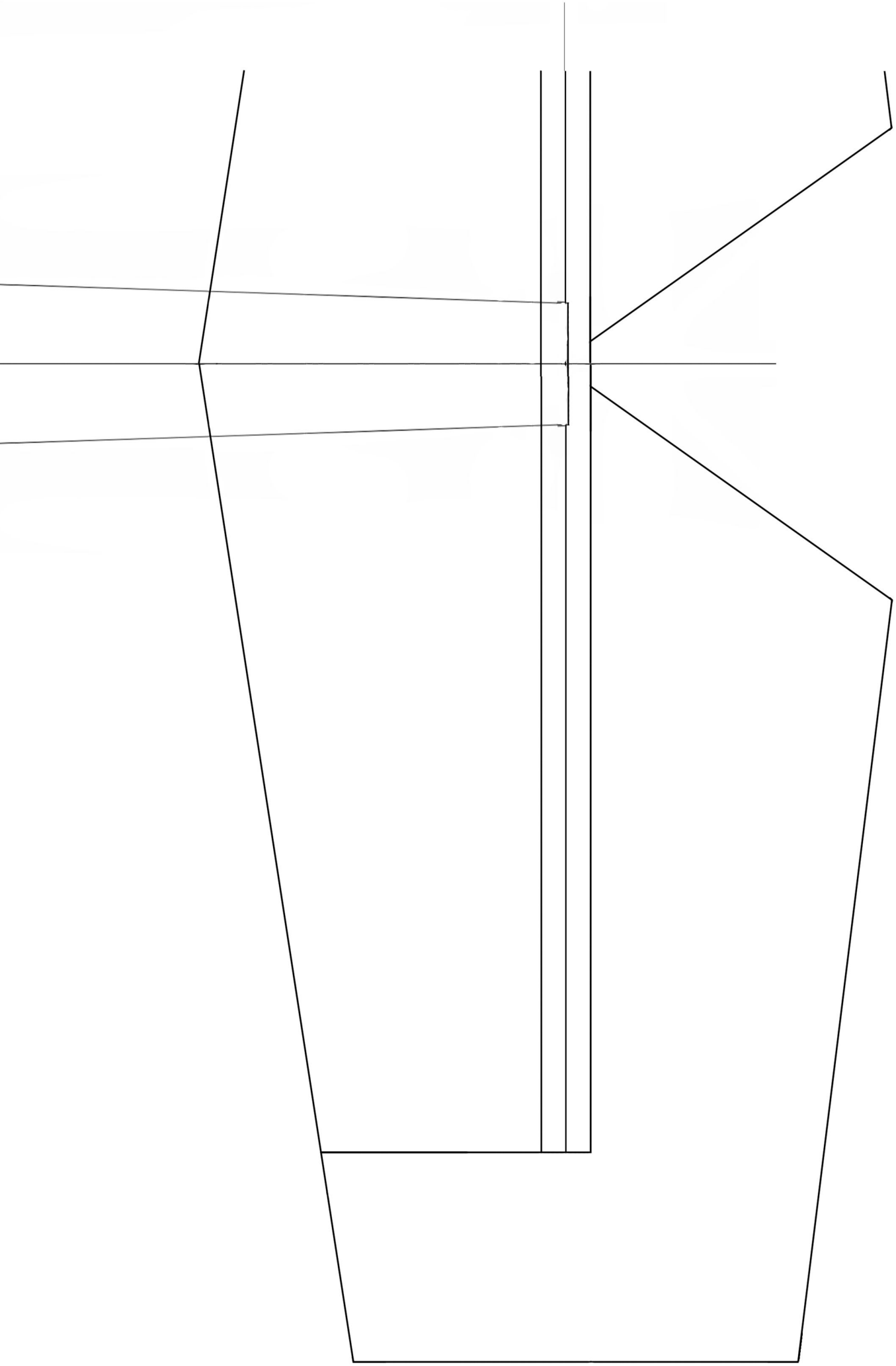

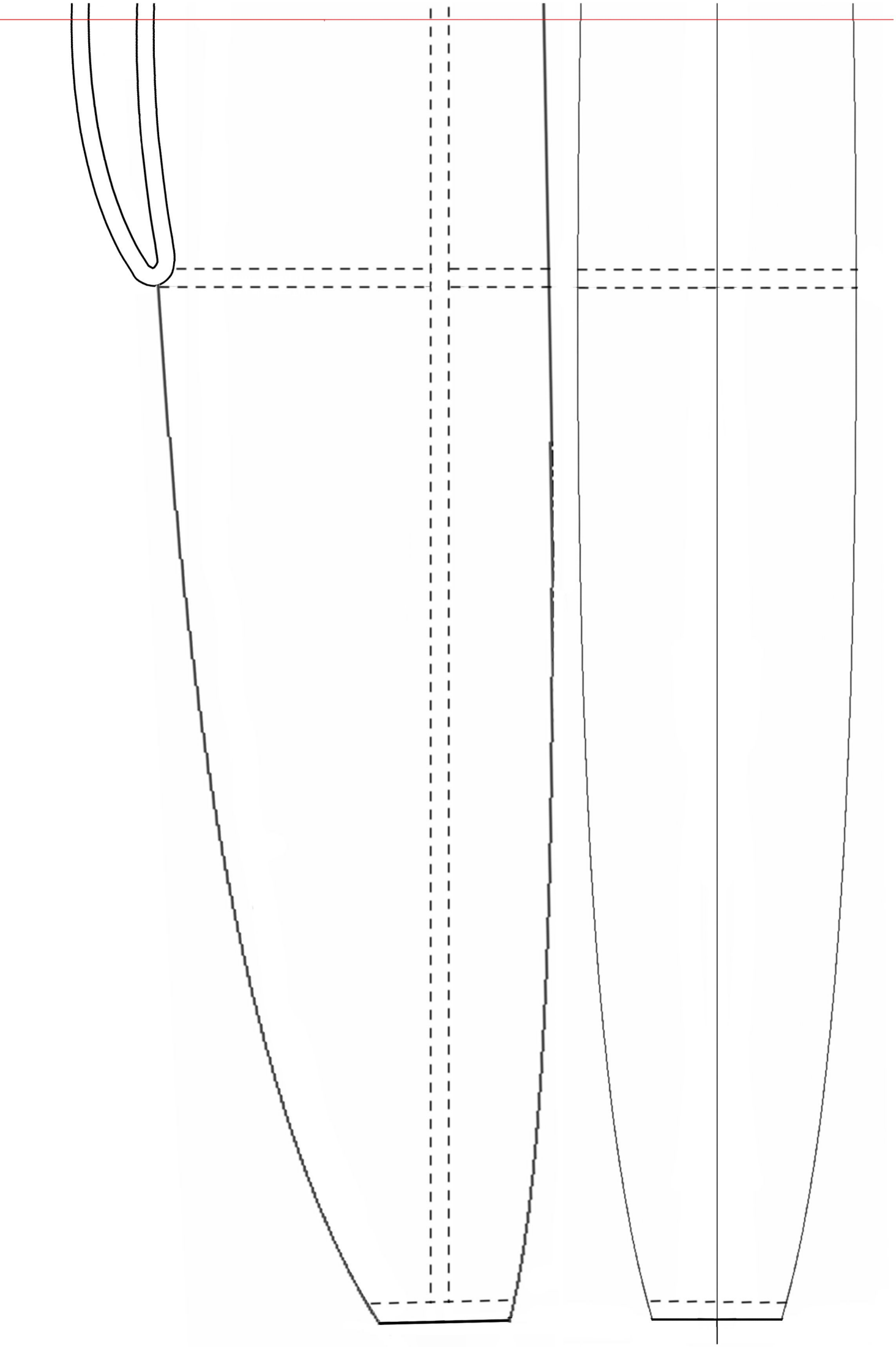

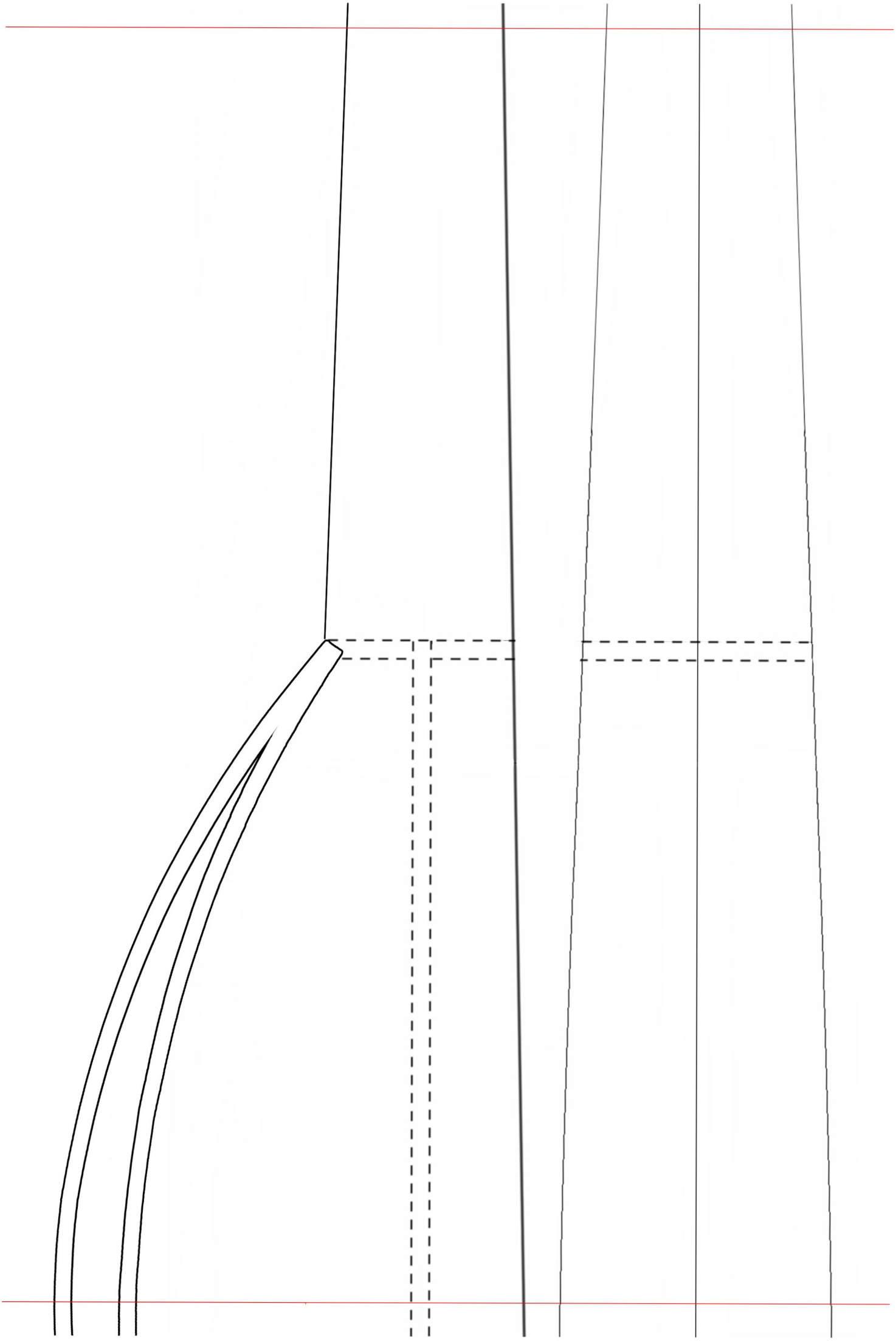

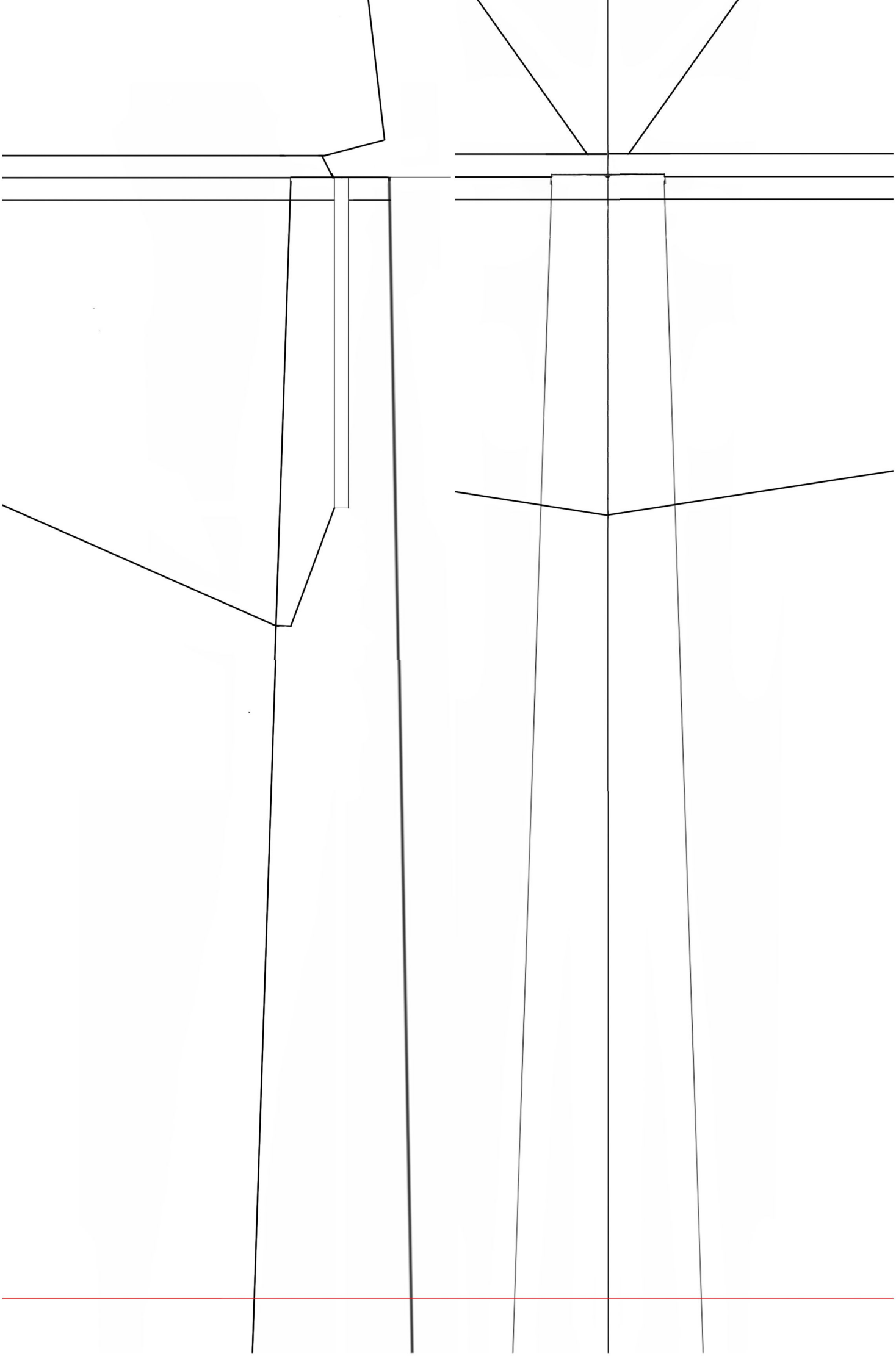

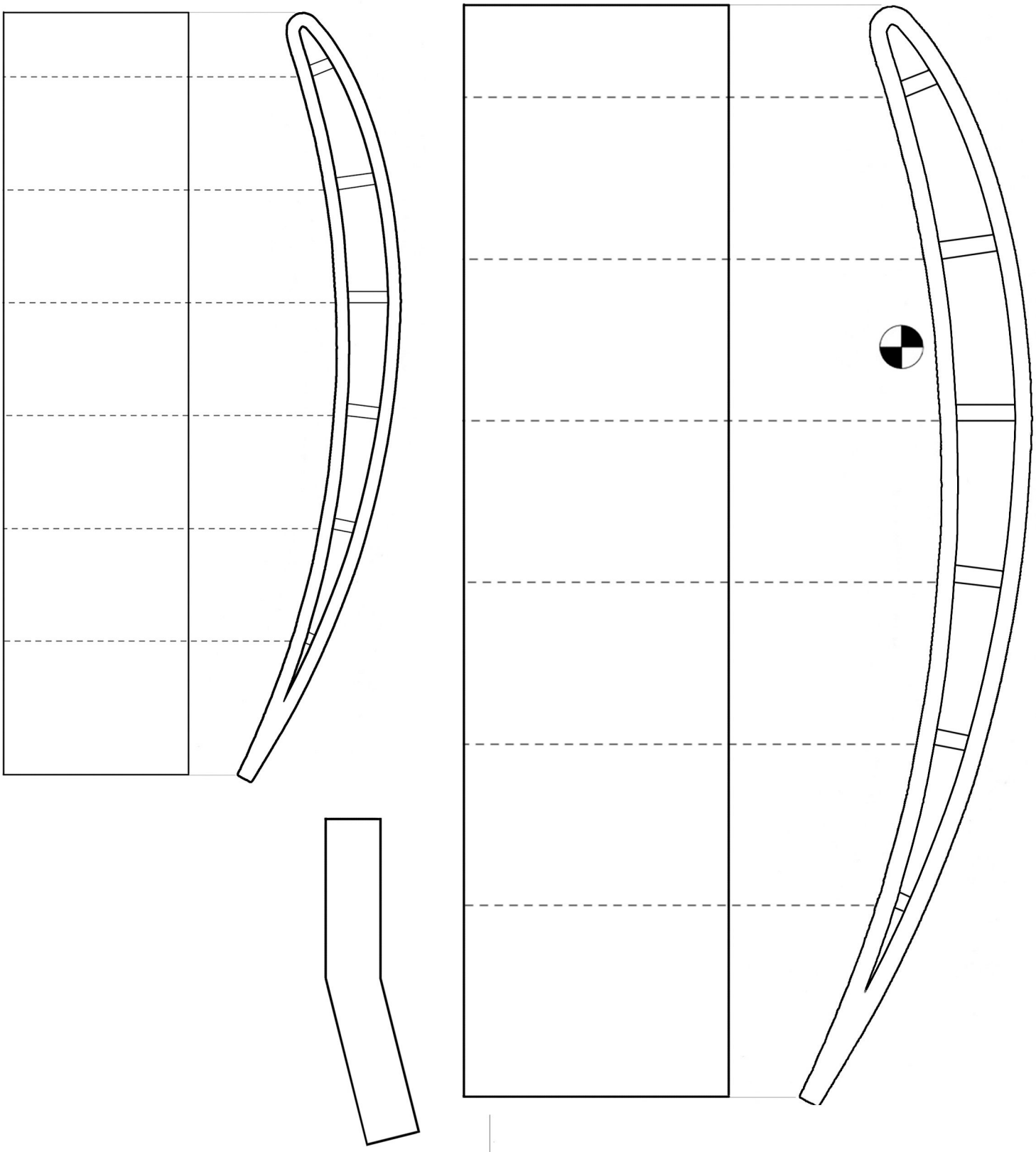

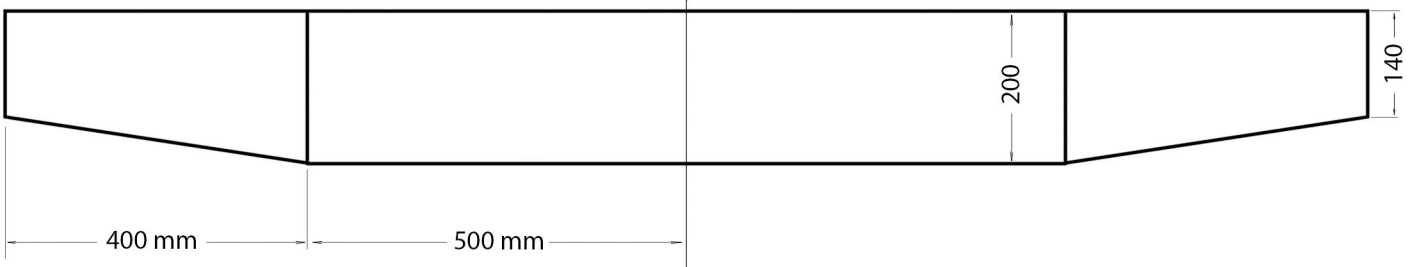
200
140
400 mm
500 mm

14°